CHAPTER 8

$$(F_{net})_x = \sum F_x = ma_x$$
$$(F_{net})_y = \sum F_y = ma_y$$

$$x_f = x_i + v_{xi}\Delta t + \frac{1}{2}a_x(\Delta t)^2$$
$$y_f = y_i + v_{yi}\Delta t + \frac{1}{2}a_y(\Delta t)^2$$
$$v_{xf} = v_{xi} + a_x \Delta t$$
$$v_{yf} = v_{yi} + a_y \Delta t$$

PROB

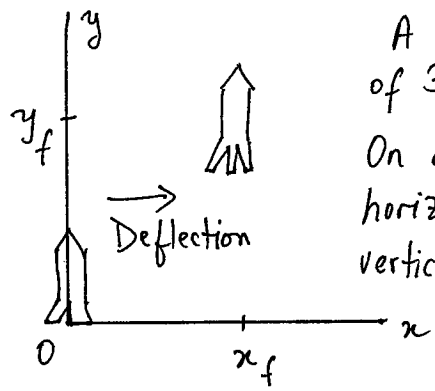

A wheather data gathering rocket has a mass of 30 kg and generates 1500 N of thrust. On a windy day, wind exerts a force of 20N horizontally. If the rocket is launched vertically upward, what is its horizontal deflection at a given height?

FBD of rocket

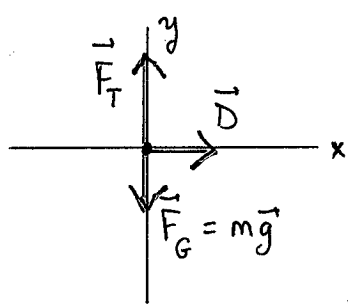

$$\sum F_x = D = ma_x \rightarrow \boxed{a_x = \frac{D}{m}}$$
$$\sum F_y = F_T - mg = ma_y \rightarrow \boxed{a_y = \frac{F_T - mg}{m}}$$

Since $x_0, y_0, v_{x0}, v_{y,0}$ are all zero;

$$x = \frac{1}{2}a_x(\Delta t)^2 = \frac{D}{2m}(\Delta t)^2 \rightarrow (\Delta t)^2 = \frac{2m}{D}x$$
$$y = \frac{1}{2}a_y(\Delta t)^2 = \frac{F_T - mg}{2m}(\Delta t)^2$$

Substituting $(\Delta t)^2 = \frac{2m}{D}x$ into y-equation,

$$\boxed{y = \frac{F_T - mg}{D}x}$$

Deflection is $\rightarrow$ $\boxed{x = \frac{D}{F_T - mg}y}$.

For data given in problem: $x = \frac{20\,N}{1500\,N - 294\,N}(y = 1000\,m) = 17\,m$

PROJECTILE MOTION

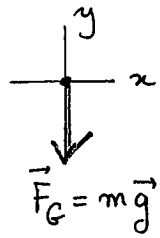

$$\vec{F}_G = -mg\hat{j}$$

which gives $\begin{cases} a_x = \dfrac{F_{G,x}}{m} = 0 \\ a_y = \dfrac{F_{G,y}}{m} = -g \end{cases}$

CIRCULAR MOTION (UNIFORM)

$$\vec{F}_{net} = m\vec{a} = \left(\frac{mv^2}{r}, \text{ Towards center of circle}\right)$$

We'll use rtz - coordinate system

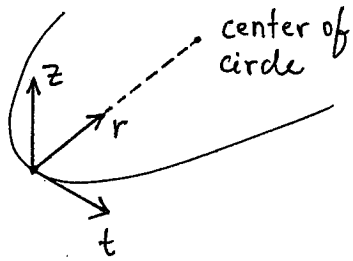

$$\boxed{(F_{net})_r = ma_r = \frac{mv^2}{r} = m\omega^2 r}$$

$$(F_{net})_t = ma_t = 0$$

$$(F_{net})_z = ma_z = 0$$

From Ch. 04, remember kinematics Equations for circular motion,

$$s = r\theta \rightarrow v_t = \frac{ds}{dt} = r\underbrace{\frac{d\theta}{dt}}_{\equiv\omega} = r\omega$$

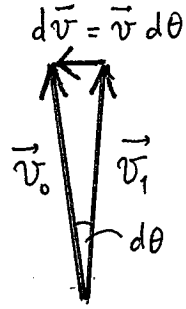

$$\left.\begin{aligned} dv &= v\,d\theta \\ d\theta &= \frac{v}{r}dt \end{aligned}\right\} \quad dv = \frac{v^2}{r}dt$$

$$a_r = \frac{dv}{dt} = \frac{v^2}{r} = \omega^2 r \quad \text{since } v = \omega r$$

Also note that $\frac{s}{r} = \theta$, $\frac{v}{r} = \omega$, $\frac{a_t}{r} = \alpha$

And the kinematics Eqns.

$$\begin{cases} \theta_f = \theta_i + \omega \Delta t + \frac{1}{2}\alpha (\Delta t)^2 \\ \omega_f = \omega_i + \alpha \Delta t \end{cases}$$

PROB

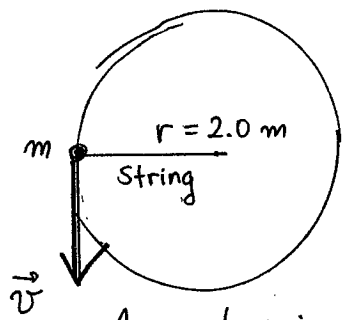

A cart going around in a circle.

How many revolutions per minute (rpm) does the cart make? Ignore friction.

$m_{CART} = 25\ kg$

The tension in the rope is 100 N.

FBD of cart

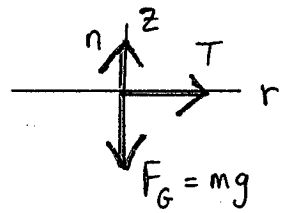

$$\sum F_r = T = m a_r = \frac{m v^2}{r}$$

$$\sum F_z = n - mg = 0$$

$$n = mg$$

$$\boxed{v = \sqrt{\frac{rT}{m}} \quad \text{or} \quad T = m\omega^2 r \qquad \omega = \sqrt{\frac{T}{rm}}}$$

$$\omega = \sqrt{\frac{100\ N}{(2.0\,m)(25\,kg)}} = 1.4\ \frac{rad}{s}$$

PROB What is the maximum speed with which a 1500 kg car can make a left turn around a curve of radius of 50m on a level road w/o slipping?

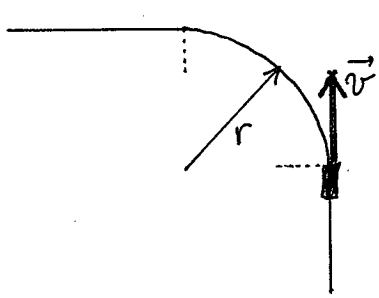

FBD of car

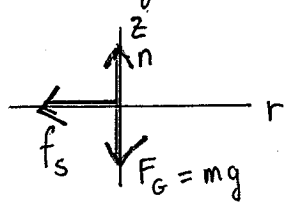

$$\begin{cases} \sum F_r = f_s = m a_r = \dfrac{m v^2}{r} \\ \sum F_z = n - mg = 0 \rightarrow n = mg \end{cases}$$

Static friction force $f_s = \mu_s n = \mu_s mg$

$$f_s = \mu_s mg = \frac{m v^2}{r}$$

$$\boxed{v = \sqrt{\mu_s g r}} = \sqrt{(1.0)(9.80\ m/s^2)(50\ m)}$$

$$v = 22\ m/s.$$

8.4 Circular Orbits

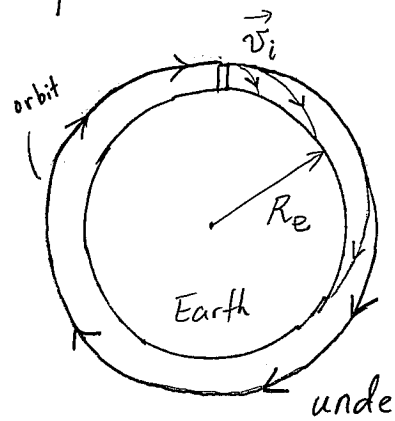

An orbiting projectile is in free fall. The only force acting on it is gravity and its v_t is so large that the curvature of the trajectory matches curvature of earth. So the object falls under gravity alone but never gets any closer to the surface of earth!

For Projectiles → $\boxed{\vec{F}_G = (mg, \text{ vertically downward})}$

For Satellites → $\boxed{\vec{F}_G = (mg, \text{ toward center})}$

$$\vec{a} = \frac{\vec{F}_G}{m} \text{ (toward center)}$$

Centripetal acceleration → $\boxed{a_r = \frac{v_{orbit}^2}{R} = g}$

$$\boxed{v_{orbit} = \sqrt{Rg}}$$

@ Earth's surface $R_e = 6.37 \times 10^6$ m and $g = 9.80$ m/s^2

$$v_{orbit} \simeq 16{,}000 \text{ mph}$$

@ 200 mi from surface of earth, $\boxed{R = R_e + 200 \text{ mi}}$

$R = 6.69 \times 10^6$ m (5% larger than R_e)

The period $\boxed{T = \frac{2\pi R}{v_{orbit}} = 2\pi\sqrt{\frac{R}{g}}}$

$$T \simeq 87 \text{ mins.}$$

For Moon, $T = 2\pi\sqrt{\frac{3.84 \times 10^8 \text{ m}}{9.80 \text{ m/s}}} \approx 1$ hrs which is clearly wrong.

Remember that g decreases w/ $R = R_e + h$.

8.5 Fictitious Forces

<u>Newton's 1st Law:</u> An object at rest will remain at rest, or an object that is moving will continue to move in a straight line, <u>if and only if</u> $\vec{F}_{net}$ acting on the object is zero.

Acceleration w/o apparent net force can arise when an inappropriate reference frame is used.

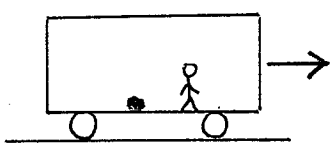

$\vec{a} = \vec{0}$

Constant v, ball stays put, $F_{net} = 0$

(Inertial Reference Frame)

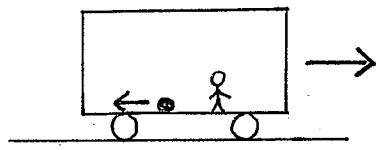

$\vec{a} \neq \vec{0}$

Acceleration, ball "moves" to the back of the cart, $F_{net} = 0$.

(Non-inertial Reference Frame)

* An "Inertial Reference Frame" is a reference frame in which Newton's Laws are valid.

* Accelerating reference frames are not inertial reference frames. Therefore earth-bound reference frames are not inertial.

$$\sum F_r = F_{E\,on\,m} - F_{sp} = m\omega^2 r > 0 \quad (F_{net} \neq 0 \text{ points toward center of Earth})$$

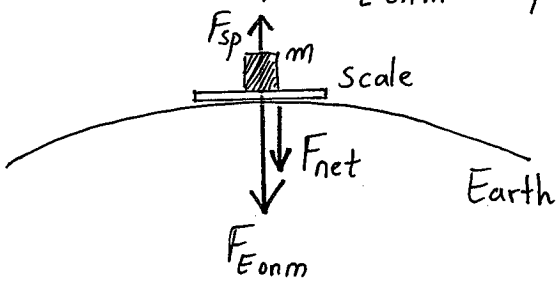

Gravitational force on m $F_{G,m}$ can be corrected for this, so that $F_{net} = 0$ and we can use Newton's Laws.

$$F_{G,m} = F_{E\,on\,m} - \underbrace{m\omega^2 r}_{\text{This is called centrifugal force}}$$

$$g = \frac{F_{G,m}}{m} = \frac{F_{E\,on\,m} - m\omega^2 r}{m}$$

$$g = \frac{F_{G,m}}{m} = \frac{GM}{R^2} - \omega^2 R$$

$$g = \underbrace{g_{Earth}}_{\sim 9.83\ m/s^2} - \underbrace{\omega^2 R}_{\sim 0.03\ m/s^2} \simeq 9.80\ m/s^2 .$$

PROB 17

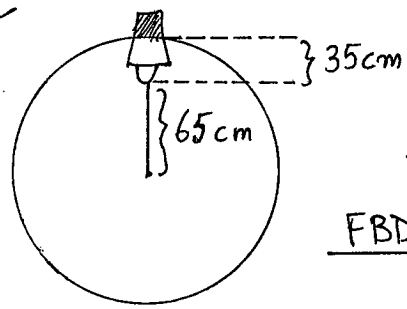

What is the minimum angular velocity ω (in rpm) for swinging the bucket on the left without spilling any?

FBD of water

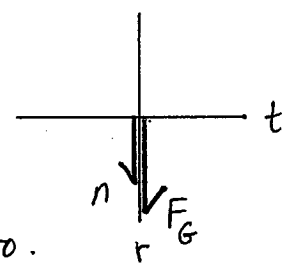

$$\Sigma F_r = n + F_G = m a_r$$

$$n + mg = m\omega^2 r$$

$$r = 65\,cm + 35\,cm = 100\,cm$$

The minimum ω is the ω at the critical time when the normal force n is zero.

$$mg = m\omega_c^2 r$$

$$\omega_c = \sqrt{g/r} = \sqrt{\frac{9.80\ m/s^2}{1.0\ m}} = 3.13\ \frac{rad}{s} \times \frac{1\ rev}{2\pi\ rad} \times \frac{60\ s}{1\ min}$$

$$= 0.5\ \frac{rev}{s} \times \frac{60\ s}{1\ min}$$

$$= 30\ rpm$$

PROB 35

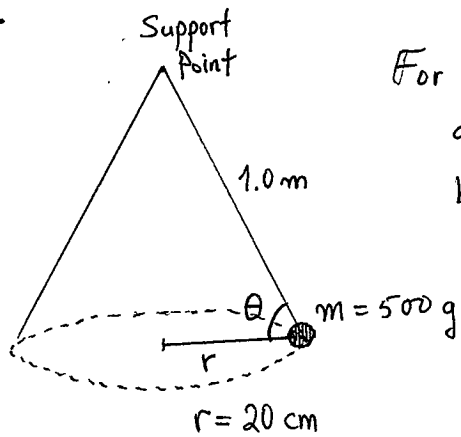

For the conical pendulum on the left:

a) What is the tension in the string?

b) What is ball's angular speed in rpm?

FBD of the ball

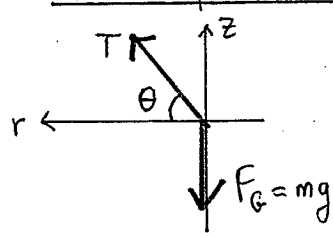

From the geometry of the problem

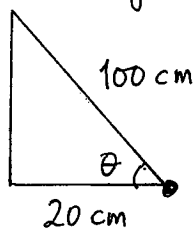

$$\cos\theta = \frac{20\text{ cm}}{100\text{ cm}} = \frac{1}{5} = 0.20 \rightarrow \theta \simeq 78°$$

$$\sin\theta = (1-\cos^2\theta)^{1/2}$$

$$= (1-(0.20)^2)^{1/2} = 0.98$$

From FBD $\rightarrow$ $\sum F_r = \boxed{T\cos\theta = m\omega^2 r}$

$$\sum F_z = \boxed{T\sin\theta - mg = 0} \rightarrow T = \frac{mg}{\sin\theta} = \frac{4.9\text{ N}}{0.98}$$

a) $\boxed{T = 5\text{ N}}$

From $\sum F_r$: $(5\text{N})\,0.20 = (0.5\text{ kg})\,\omega^2\,(0.2\text{ m})$

$$\omega^2 = 10$$

$$\omega = 3.2\ \frac{\text{rad}}{\text{s}} \times \frac{1\text{ rev}}{2\pi\text{ rad}} \times \frac{60\text{ s}}{1\text{ min}}$$

$$\boxed{\omega = 30\ \frac{\text{rev}}{\text{min}}}$$